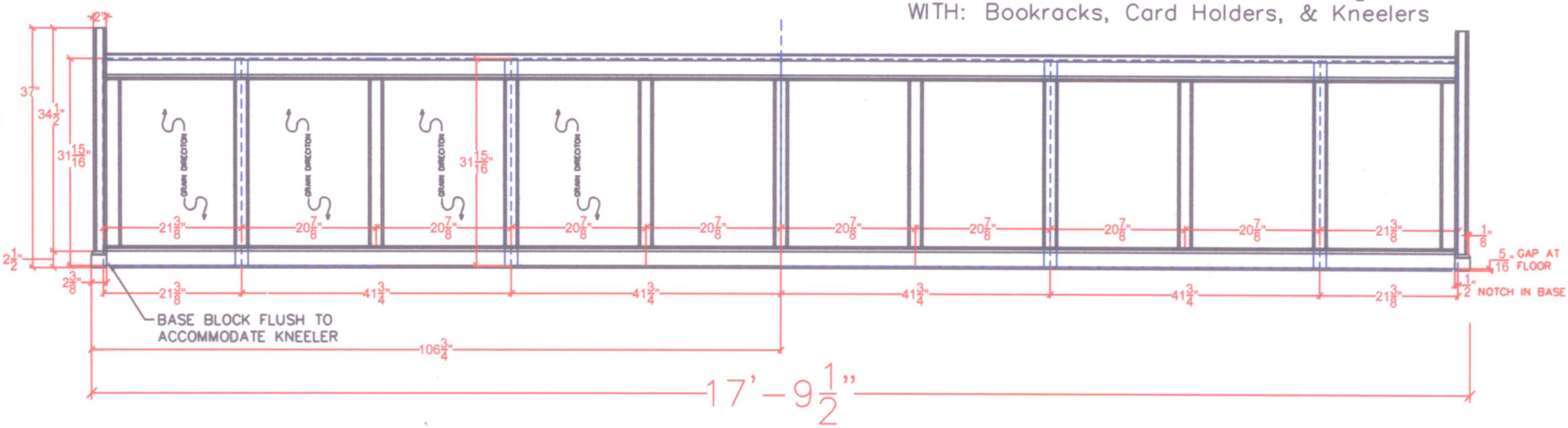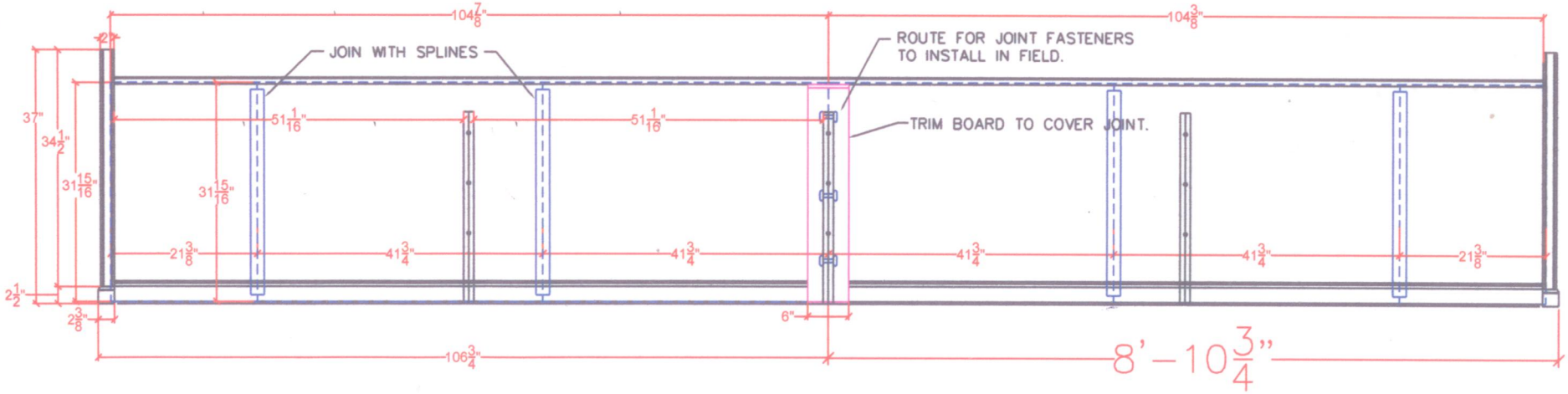2 TR-61 FRONTAL SCREENS @ 17' 9½" EA.
WITH: Bookracks, Card Holders, & Kneelers